ATEÏS

Public Address - Voice Alarm

Audio Distribution over IP

Commercial Audio

Loudspeakers

Commercial Audio

CATALOGUE

Delivering Your Message

ATEÏS

DELIVERING YOUR MESSAGE

Dear Friends,

Following the new PA/VA catalogue, once again we proudly present to you our new section, covering;

Commercial Audio

This new impressive portfolio has been compiled in a whole new format showing you our vision on product designs and product innovation. As you go through the pages, you will discover that our portfolio has undergone many changes compared to our previous edition.

Audio networking has become a very common item nowadays and most of the powerful audio routers are equipped with it. Unlike most manufactures, who chosen the simple solution, ATEÏS chose to develop its own low-latency audio and data network devices that are capable of handling up to 48 broadband audio streams with a latency of less than 1 ms. This makes the ATEÏS-NET systems perfectly adapted for live-performance applications.
Besides the networking, all our routers are equipped with very powerful pre and post processing elements, paging facilities, teleconferencing and VPN connectivity and the list continuous …

Please take your time to study this collection of valuable information and ensure yourself that ATEÏS delivers the right products and the best flexible solutions you have been looking for.

Take the opportunity to share your thoughts with us and we will provide you the solution!

We are looking forward to your business!

CONTACT

LAP DSP AUDIO MATRIX SYSTEM

Designed for large sized prosound applications, the LAPs are the first products to combine PRO-sound requirements within a multi channel secured and dedicated low-latency audio- and data network.

UAP DSP AUDIO MATRIX SYSTEM

Specially designed for small to medium commercial applications, the UAP G2 is the new DSP audio matrix for medium paging and multizone audio routing applications.

ECS ECHO CANCELLATION SYSTEM

The ECS is a digital signal processor featuring dynamic Automatic Echo Cancellation based on our own developed wideband acoustic and line-echo cancellation algorithm. Designed specifically to provide clear audio in teleconferencing applications.

CONSOLES AND ACCESSORIES

LAPG2

Networked Linked Audio processor

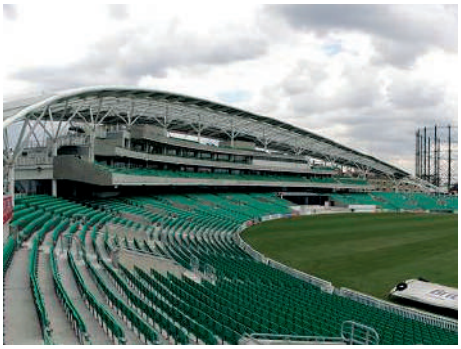

Easy to use PC software for system design and control (GUI)

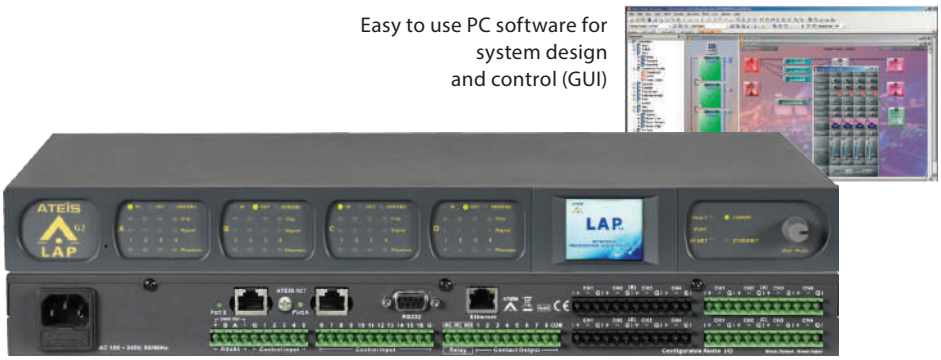

FEATURES

- Free drag and drop DSP architecture.
- CAT5 and fiber optic redundant audio networking capabilities.
- Internal processing of audio signals can be fully programmed to suit the client's application.
- Excellent sound quality (24 bits, 48 kHz and 96 kHz sampling).
- Impressive array of signal processing tools.
- Easy to use PC software for system design and control (GUI).
- Advanced Preset manager.
- Powerful microphone paging and remote control functions.
- Highly flexible input and output configurations.
- Two 600M flops DSPs.
- Up to 32 LAPs on the network.
- Latency < 1 msec.
- Up to 32 microphones per LAP.
- Up to 32 remote controlers per LAP.
- 100 V and Low impedance surveillance.
- EN 60849 and BS 5839 compliance.

LAPG2 - 4In12Out
4 inputs - 12 outputs audio processor

LAPG2 - 8In8Out
8 inputs - 8 outputs audio processor

LAPG2 - 12In4Out
12 inputs - 4 outputs audio processor

LAPG2 - 16In
16 audio processor

LAPG2 - 16Out
16 audio processor

Designed for PRO Audio and Commercial applications, the LAPG2 Networked linked Audio processor are the first products to combine secured networking and PRO-sound requirements.

SONIC EXCELLENCE

The advanced 24 bits A/D and D/A convertors, together with the 96 kHz-capable audio processing and the 400 mHz SIMD SHARC core, capable of 2.4 GFLOPS peak performance, guarantee an excellent sound quality and low latency.

IMPRESSIVE ARRAY OF SIGNAL PROCESSING TOOLS

The LAPG2 are comprehensive systems which integrate pre-amplifier, compressor-limiter, equalizer, as well as matrixing and delay functions into one unit. Useful features like Automatic Gain Control, Feedback killers, Automatic Microphone mixers and Crossovers are also part of the LAPG2 DSP components library.

This new generation provide a message storage component which able to store several audio message in the LAPG2.

The following events: Play a message, change master preset, sub preset, element adjustment or set the TTL out can be controlled by third party protocol, by an analog input or by the scheduler. The scheduler can lead all the events described above. Internal processing of audio signals can be fully programmed to suit the client's application. Installers can select the audio processing feature(s) which they wish to apply to the various inputs and outputs from a library on their PC, using software provided with the LAPG2. Once the configuration process is completed, it can be loaded into the LAPG2. All configurations can be backed-up onto PC and loaded into the LAPG2 as and when required.

ADVANCED PRESET MANAGER

The LAPG2 includes two types of presets :

- More than 20 Parameter presets: they enable values of multiple parameters of the same design, such as levels, gains, EQ, etc. to be restored either from the PC software, the remote controllers or the control inputs.
- More than 10 Design presets: they enable completely different designs to be restored. An application example for this feature are hotel meeting rooms with removable walls.

Furthermore, LAPG2 now provides a TCP/IP port with RJ45 connector. PC-based custom control panels can now operate the LAPG2 from remote locations through a TCP/IP network.

16 ANALOGUE CONTROL INPUTS

The LAPG2 has 16 control inputs which can be configured as analog control input (0 to 5 VDC or as logic input (TTL) Each control can be associated to any of the variable audio processing functions of the LAPG2 (input level, output level, equalization, routing). Several parameters (Min + Max values, positive or negative variation, linear, log, anti-log) can be programmed for each of those controls.

16 LOGIC INPUTS, 8 LOGIC OUTPUTS (GPIOS)

In addition of the logic inputs, each LAPG2 is also equipped with 8 logic outputs (TTL). Each of those hardware input/output's can be associated to virtually any software button the system designer requires to. The logic inputs could be use to mute or activate an audio signal while the logic outputs enable the LAPG2 to control external equipment. The logic inputs can be used in normal or binary mode.

NET-Lx

ATEÏS Net secured Audio Network

The front panel display and rotary knob allow following setups to be performed without a PC : Time and date settings, preset change, log file access. Of course, those front panel settings can be password protected.

AUDIO CARD INDICATIONS

- Clip: yellow
- Signal: green (with sensitivity selection)
- Phantom: green
- Input: green/Output: green
- AES/EBU: green

GLOBAL INDICATIONS

- Power OK: green
- Fault: yellow
- EVAC: red
- Stand by: green
- Data: green
- Ethernet: green
- ATEÏS-NET: green

RS-232 SERIAL INTERFACING FOR THIRD PARTY CONTROL

The LAPG2 can be controlled from third party equipment like Vity, AMX or Crestron via its RS232 serial port.

CAT5 AND FIBER OPTIC REDUNDANT AUDIO NETWORKING CAPABILITIES

ATEÏS has developed its own audio networking system "ATEÏS-NET Secured Audio Network". This Ethernet based network is able to simultaneously transport 48 audio channels (32 bits, 48 kHz sampling rate) with a latency < 1m sec together with the necessary control data.

For decentralised or big applications, an optional networking card can be inserted inside the LAPG2s.

Thanks to its loop architecture, the ATEÏS-NET Secured Audio Network audio network is fully redundant. If a problem (Line open or shorted) occurs on a loop segment, it will be automatically isolated without affecting the system functionalities.

Up to 32 LAPG2s can be connected together on the same network. As the Network addresses are auto-negociated, the network set up is very easy. Once programmed the system will be able to work independently (off-line) without the PC.

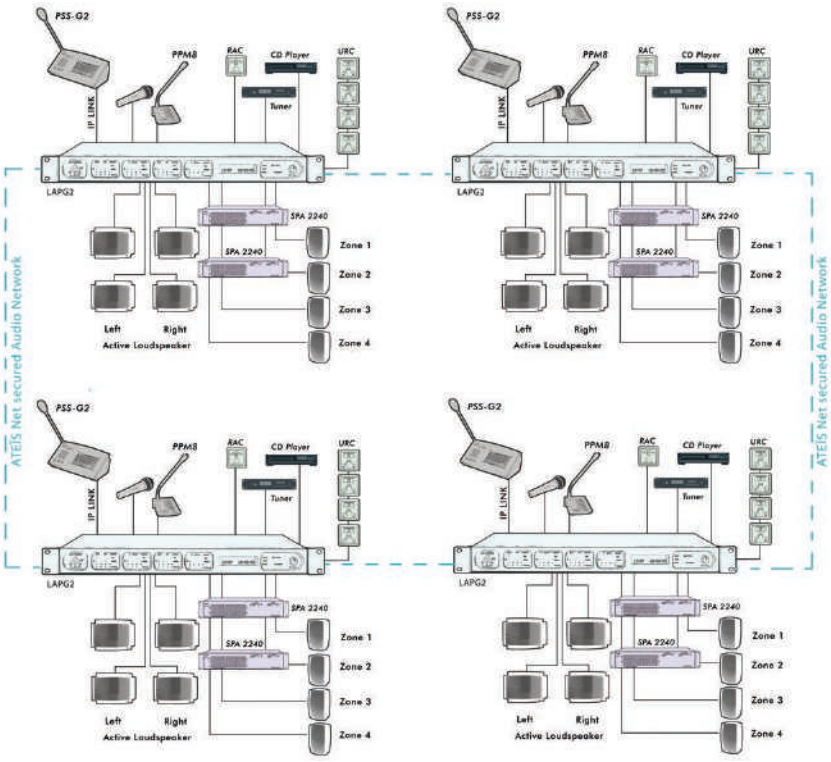

NET-L1

With two RJ45 connectors for CAT5 cabling, max 100 m/300 ft between two LAPs.

NET-L3

With two ST-Fiber connectors, Multimode, max 2000 m /6000 ft between two LAPs.

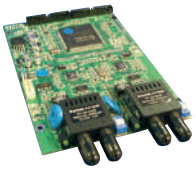

NET-L2

With one STFiber (port A) + 1x RJ45 connectors (port B).

NET-L4

With one RJ45 connector (Port A) and one ST-Fiber connector (Port B).

UAP G2

Expandable Universal audio processor

Easy to use PC software for system design and control (GUI)

FEATURES

- Easy to use and user-friendly control windows for client operation.
- Excellent sound quality (24 bit A/D and D/A converter, 48/96 kHz sampling, SHARC 32 bit-266 Mhz DSP).
- Impressive array of signal processing tools.
- Audio I/O: 4x12, 8x8, 12x4, 16i or 16o, line/ Mic and 48V phantom power.
- Free drag and drop architecture digital audio processing modules.
- Auto Gain Control (AGC) through background noise level sensing.
- Easy to use PC software for system design and control (GUI).
- Advanced Master/Sub Preset manager.
- Hundreds of presets and an advanced event scheduler.
- Message player (up to 20 minutes in 16 bits and 16 kHz bandwidth).
- Microphone paging and control functions.
- Highly flexible input and output configurations.
- 8 programmable control knobs on front panel, and 8 logic output controls.
- 6 programmable remote controls up to a distance of 5 kms va CAT5.
- 3rd party control via RS232 or Ethernet.
- Ethernet and TCP/IP connection for system setup and remote control.
- RS485 connection for ATEÏS remote devices:
  - URC-150 (Universal Remote Control)
  - PPM-SPWJB (Programmable Paging Microphone)
- Cascade with up to 12 unit via digi-link and share16 audio channels in 48 kHz or 5 audio channels in 96 kHz.

UAP G2-4In12Out
4 inputs-12 outputs audio processor

UAP G2-8In8Out
8 inputs-8 outputs audio processor

UAP G2-12In4Out
12 inputs-4 outputs audio processor

UAP G2-12In4Out
12 inputs-4 outputs audio processor

UAP G2-16In
16 inputs audio processor

UAP G2-16Out
16 outputs audio processor

The UAP G2 is our latest DSP expandable universal audio processor for medium paging and multizone audio routing applications. With its powerful audio digital signal processing, the UAP G2 can easily be used for a demanding environment for high audio quality.

SOUND QUALITY

The advanced 24 bit A/D and D/A converters, together with the 48/96 kHz capable audio processing and the ADSP 21371 DSP (266 MHz SIMD SHARC Core, capable of 1596 MFLOPS peak performance), guarantee an excellent sound quality with the lowest possible latency.

EASY TO USE PC SOFTWARE FOR SYSTEM DESIGN AND CONTROL (GUI)

The UAP G2 System software provides all the necessary tools to setup, configure, control and monitor the entire UAP G2 system.

IMPRESSIVE LIBRARY OF SIGNAL PROCESSING TOOLS

The UAP G2 is a comprehensive system which integrates preamplifier, compressor-limiter and equalizer, as well as matrix and delay functions into one unit. Including Automatic Gain Control, Feedback killers, Automatic Microphone mixers and Crossovers, Automatic Noise are also part of the UAP G2 DSP component library.

Internal processing of audio signals can be fully programmed to suit the client's application. Installers can drag and drop the audio processing feature(s) that they wish to apply to the various inputs and outputs from the DSP compoment library, using the software provided with the UAP G2.

Once the configuration process is completed, it can be uploaded into the UAP G2. All configurations can be downloaded in PC for configuration backup and loaded into the UAP G2 as and when required.

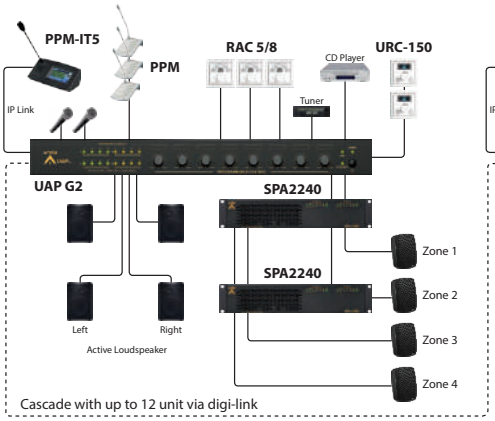

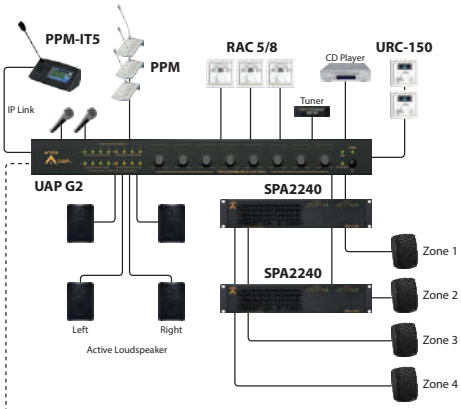

UAP G2

Expandable Universal audio processor

ELECTRICAL

- Power supply
  - AC: 100 to 240 VAC, 50/60 Hz
  - DC: 21 ~ 28 VDC
- Consumption: 40VA, 10VA in standby mode

AUDIO INPUTS

- Audio input impedance: 10 k ohms (symmetrical, screw terminal).
- Input sensitivity: 0 dB, -12 dB, -24 dB,-40 dB, -55 dB (software selection).
- Max input: +15 dBu
- Bandwidth: 20 Hz to 20 kHz
- Phantom power: 48VDC / 14mA

AUDIO OUTPUTS

- Audio output impedance: 100 ohms (symmetrical, screw terminal)
- Bandwidth: 20 Hz to 20 kHz
- Max output: +15 dBu
- Total harmonic distortion: < 0.03% , 0 dBu, 20 ~ 20 kHz, unity gain, 20 kHz BW
- S/N: (100 dB), (re+15 dBu), unity gain, 22 kHz BW
- S/N: (80 dB),(re+15 dBu), (54 dB gain), 22 kHz BW

SERIAL CONNECTIONS

- RS232 port: for third party equipment remote control
- RS485 port: for PPM-SPWJB paging console and URC-150 remote controller data control
- RJ45 port: for PC control and system setup

DIGITAL LINK

- One RJ45 TX to send data and audio to next UAP G2
- One RJ45 Rx to receive data and audio from the previous UAP G2

CONTROL OUTPUTS

- 8 common rail contact outputs.
  Note: you cannot choose between NO and NC

CONTROL INPUTS

- 16 logical inputs or analogue inputs: 0 to 5 VDC (software selection)

MECHANICAL

- Dimensions (W x H x D): 432 x 44 x 245 mm
- Weight: 3.5 kg
- Mounting: 19" 1U rack
- Colour: RAL 7016 (grey)

ADVANCED PRESET MANAGER

The UAP G2 includes two types of presets:
More than 16 parameter presets: They enable values of multiple parameters of the same design, such as levels, gains, EQ, etc. to be restored either from the PC software, the remote controllers or the control inputs.
More than 32 design presets: they enable completely different designs to be restored. Application examples for this feature are hotel meeting rooms with removable walls.

MESSAGE PLAYER

The Message player incorporated into the UAP G2 allows you to play any kind of message to be played. A message player can only be run at a time per UAP G2. With the 100 Mbyte memory, the following capacity of message memory are available with WAV format:

- 53 minutes of audio message at 16 kHz, 16 bits
- 34 minutes of audio message at 24 kHz, 16 bits
- 17 minutes of audio message at 48 kHz, 16 bits

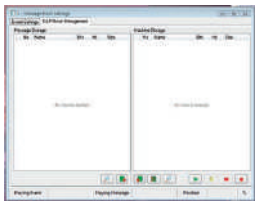

SCHEDULER AND EVENT MANAGEMENT

The scheduler allows planning of events (preset change, message play, close/open TTL out or DSP component adjustment). Up to 128 different schedules can be scheduled. And you can define up to 100 events in one schedule.

CONTROL INPUTS

The UAP G2 has 16 (0 to 5 VDC) control inputs either analogue or Logical. Each control can be associated to any of the variable audio processing functions of the UAP G2 (input level, output level, equalization, routing, mute, bypass, preset change etc.). Several parameters (Min + Max values, positive or negative variation, linear, log, anti-log) can be programmed for each of these controls.

8 LOGIC OUTPUTS (GPIOS)

Each UAP G2 is equipped with 8 logic outputs (common rail contact), they can be associated to virtually any software buttons or LEDs the system designer requires. The logic outputs can be used to enable the UAP G2 to control external equipment.

RS232 SERIAL INTERFACING FOR 3RD PARTY CONTROL

The UAP G2 can be controlled from third party equipment such as Vity, AMX or Creston via RS232 serial port or IP network.

ETHERNET PORT

The UAP G2 can be programmed, controlled and also monitored via IP network using its the RJ45 Ethernet port.

JUNCTION BOX

To connect one or several remote devices (PPM-SPWJB or URC-150) on UAP G2, it requires to add an external power supply via Junction Box (JB) using STP CAT5/6 cable with shielded RJ45 connector.

UAP G2 DIGITAL LINK

If more inputs or outputs are required, up to 12 UAP G2 units can be cascaded via Digi-Link port. (maximum distance between the two UAP G2 is 10 meters). Through this link, you can share up to 16 channels at 48 kHz or 5 channels at 96 kHz sampling rate to the next device.

RS-232 SERIAL INTERFACING FOR 3RD PARTY CONTROL

The UAPG2 can be controlled from third party equipment such as Vity, AMX or AMX, Creston or Vity via RS232 serial port, RS232 serial port, or IP network.

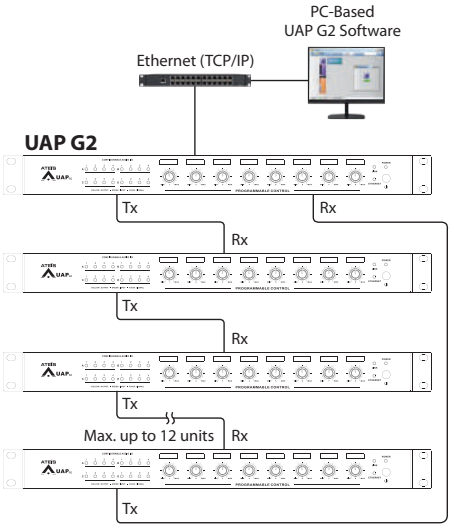

Digital Link
32 bit. 48 kHz smapling x 16 Channel + Data
32 bit. 96 kHz smapling x 5 Channel + Data

ECS

Networked Echo Cancellation System

ATEÏS-NET
graphical user interface

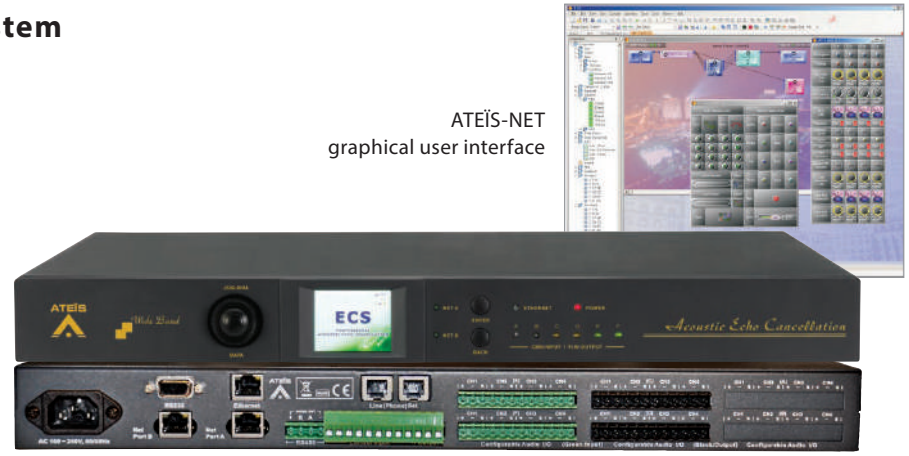

FEATURES

- Dynamic Echo Cancellation tail time; Shifted - Standard 130 ms, max. 260 ms
- Noise reduction: 6 ~ 20 dB.
- Up to 16 AEC software modules.
- Up to 24 input/output channels.
- Powerful 48 channel Networking.
- ATEÏS-Net ports with up to 32 multi-unit system designs.
- Powerful networked automixer, for up to 256 delegates within one system.
- Programmable logic in-and outputs.
- Ethernet port for remote diagnostic and system configuration.
- Support IP telephone with SIP protocol and G.711 G.722 voice codec via Ethernet port.
- Up to 16 broad-band AEC software modules.
- From 4 up to 24 balanced mic/line inputs outputs combinations (See type number specification)
- Serial port for third-party RS-232 remote control.
- Remote control bus for dedicated control panels.
- Windows-based ATEÏS Studio software.
- Modular I/O with pre-definable processing.
- RoHS compliance, CE marked.
- Ability to select, view, and adjust within ATEÏS-Studio graphical user interface:
  - Mixers: standard, automatic, matrix, combiners
  - Equalizers: graphic, parametric, feedback
  - Filters: HPF, LPF, high shelf, low shelf, all-pass
  - Crossovers: 2-Way, 3-Way and 4-way
  - Dynamics: leveler, comp/limiter, ducker, ANC
  - Routers: 2x1 ~ 768x1 and 384x384
  - Delays: 0 ~ 2000 ms
  - Controls: levels, presets, logic, RS232, etc.
  - Meters: signal present, peak, RMS
  - Generators: tone, pink-noise, white-noise
  - 2 years full warrantee

ECS 111
4 inputs/4 outputs/4 AEC-channels

ECS 211
8 inputs/4 outputs/4 AEC-channels

ECS 212
8 inputs/4 outputs/8 AEC-channels

ECS 222
8 inputs/8 outputs/8 AEC-channels

ECS 322
12 inputs/8 outputs/12 AEC-channels

ECS 413
16 inputs/4 outputs/12 AEC-channels

ECS 514
20 inputs/4 outputs/16 AEC-channels

ECS T
Optional Telephone hybrid card

The ECS Networked Echo Cancellation System is a digital signal processor featuring dynamic Automatic Echo Cancellation based on our own developed wideband acoustic echo cancellation algorithm. Designed specifically to provide clear audio in teleconferencing applications. The ECS delivers true 20 Hz to 22 kHz bandwidth during multiple participant conversations, with natural full duplex transmission of speech with no latency, including double talk.

Driven by the ATEÏS Studio GUI software, the ECS includes a broad selection of audio components, routing options and signal processing. The ECS is a comprehensive system which integrates compressor-limiter and equalizer, as well as matrix and delay functions into one unit.
Useful features like Automatic Gain Control, Feedback killers, Meters, Generators and Automatic Microphone mixers are also part of the ECS DSP component library. Internal processing of audio signals can be fully programmed to suit the client's application. Installers can select the audio processing feature(s) that they wish to apply to the various inputs and outputs from a library on their PC, using the software provided with the ECS. The internal system design is completely user-definable via PC software, and can be controlled via dedicated software screens, RS-232 control systems, and a variety of optional remote controls.

Multiple ECS-systems can be created utilizing Ethernet and ATEÏS NetLink light.

Telephone hybrid capabilities include: initiation of outgoing calls detection and answering of incoming calls. ECS features up to 16 wide-band AEC software modules and up to 24 configurable hardware electronically balanced inputs and/or outputs, telephone interface with line & set connections, Ethernet port for software configuration/control, serial port for third-party RS-232 remote control and remote control bus for dedicated control panels like the URC-150AS programmable remote controllers.

ATEÏS NetLink light provides 48-channels broadband audio distribution, linking up to 32 units in a dedicated network creating a through 768 channels audio-conferencing system.

ECS

Networked Echo Cancellation System

AUDIO INPUTS

- Audio input impedance: 10k ohms (symmetrical, screw terminal)
- Input sensitivity: 0 dB, -12 dB, -24 dB, -40 dB, -55 dB (software selection)
- Max input: +15 dBu
- Bandwidth: 20 Hz to 20 kHz
- Phantom power: 48VDC / 14mA

AUDIO OUTPUTS

- Audio output impedance: 100 ohms (symmetrical, screw terminal)
- Bandwidth: 20 Hz to 20 kHz
- Max output: +15 dBu
- Total harmonic distortion: < 0.03% , 0 dBu, 20~20 kHz, unity gain, 20 kHz BW
- S/N: (100 dB), (re+15 dBu), unity gain, 22 kHz BW
- S/N: (80 dB), (re+15 dBu), (54 dB gain), 22 kHz BW
- Dynamic range: (100 dB), (re+15 dBu), 22 kHz BW

SERIAL CONNECTIONS

- RS232 port: for third party equipment remote control
- RS485 port: for Remote data control
- RJ45 port: for PC control and system set up using ATEÏS Studio software

DIGITAL LINK

- One RJ45 TX to send data and audio to next ECS
- One RJ45 Rx to receive data and audio from the previous ECS

CONTROL OUTPUTS

- 8 common rail contact outputs

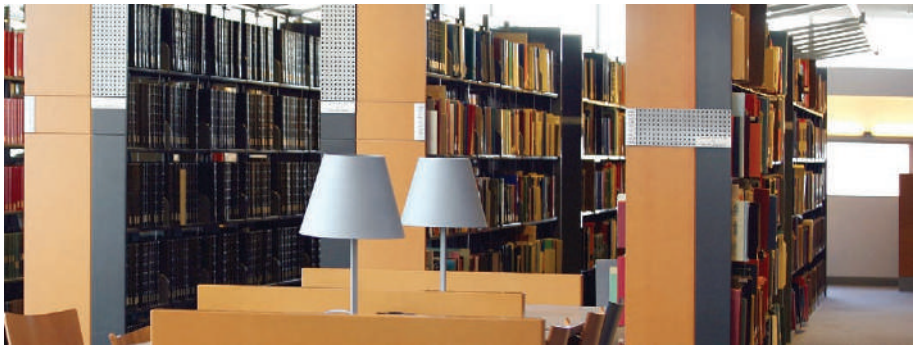

AUDIO TELECOMMUNICATION

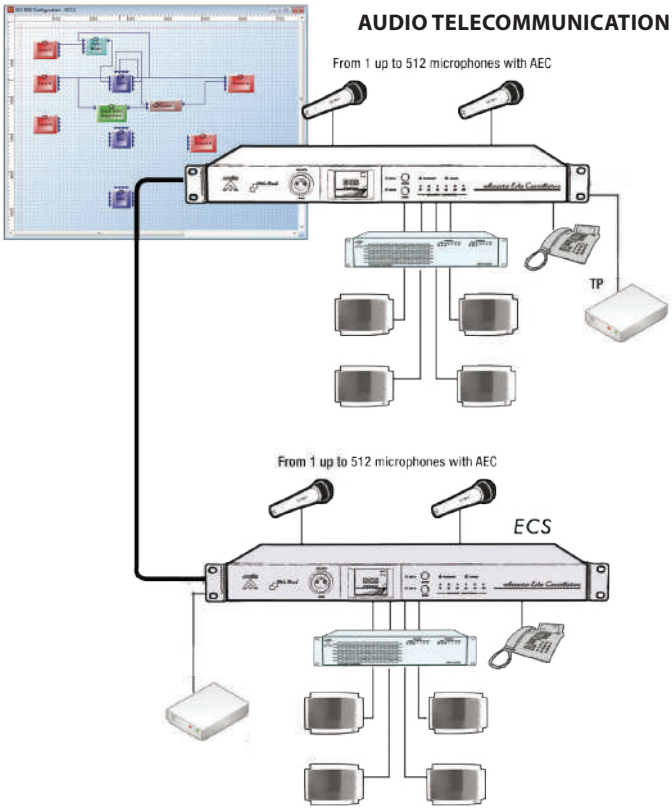

NETWORKED ECHO CANCELLATION SYSTEM

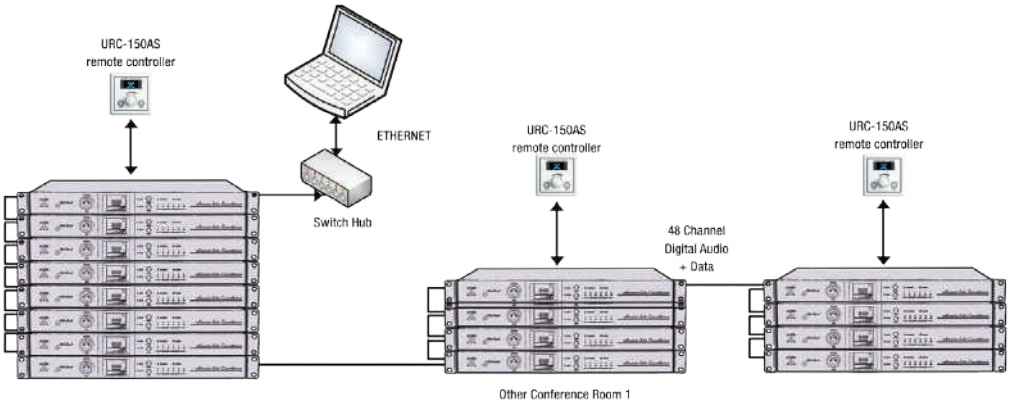

RAC / URC-150 / URC-200 / NSM

Remote Controllers & Sensing Microphone

RAC 5/RAC 8

5/8 Steps Level and Source Selector

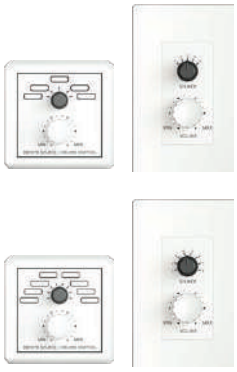

The RAC 5/RAC 8 can be used for adjusting audio level or switch audio channel remotely. The 5/8 steps knobs on RAC 5/RAC 8 can be programmed via TERRACOM web browser. The RAC 5/RAC 8 is available for US and EU type, and is powered by 24VDC.

MECHANICAL

Weight: 0.22 lbs (100g)

Dimension (W x L x H): 2" x 3-3/10" x 3-3/10" (52 x 84 x 84 mm)

URC-200

Ethernet Universal Programmable Remote Controller

The URC-200 is a programmable remote controller (TCP/IP) which is powered over IP and can be easily integrated with room control such as light turn on/off, curtain, audio control to create smart homes and offices.

The full colour display is easy to read and has a low-power consumption, it features a scalable knob, 2 buttons for "enter" and "back".

MECHANICAL

Weight: 0.22 lbs (100g)

Dimension (W x L x H): 2" x 3-3/10" x 3-3/10" (52 x 84 x 84 mm)

URC-150/URC-150AS

Universal Remote Controller

The URC-150/URC-150AS can be programmed to control the volume, EQ adjustment, and presets. It's equipped with an OLED panel for displaying information of status or parameters, plus two buttons [EXIT] and [BACK] and a rotary knob.

* URC-150: for UAP system
* URC-150AS: for ECS, LAPG2T, IDA8 system

NSM

Noise Sensing Microphone

The NSM assures the omnidirectional sound recording and preamplification of the surrounding background noise.

The 0 dB modulation is sent through the UAP G2 /LAPG2 in order to provide the automatic gain control feature of the A.N.G (Auto Noise Gain) component and allows the level adjustment where the NSM is implemented.

Typical example with UAP G2 DSP audio matrix System

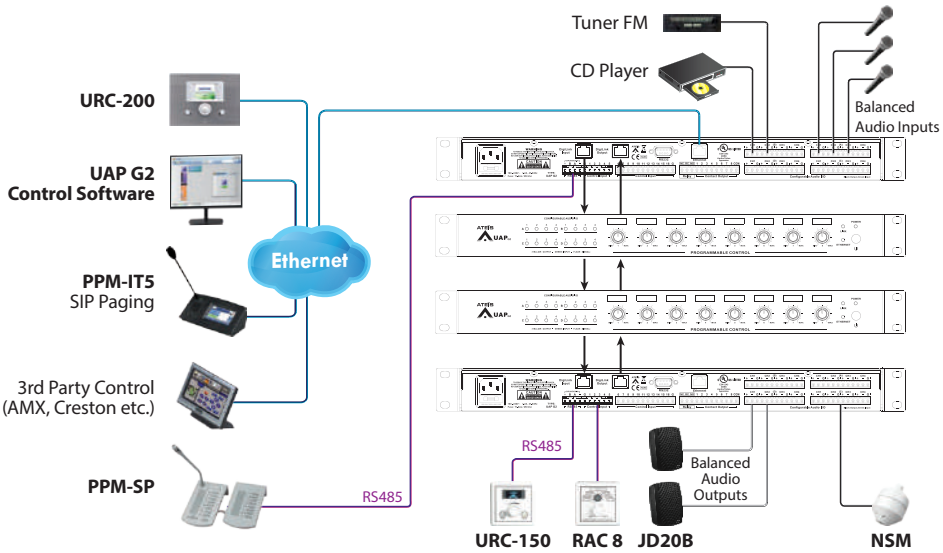

COMPATIBILITY	UAP G2		LAP G2		ECS	
PM1	V	Using one audio input + one contact. Limited to the amount of audio-inputs per system.	V	Using one audio input + one contact. Limited to the amount of audio-inputs per system.	V	Using one audio input + one contact. Limited to the amount of audio-inputs per system.
PPM-SPWJB PPM-KP	V	Max. 16 on an unit using 16 audio inputs. Max 32 in a system sharing the same RS485.	V	Max. 16 on an unit using 16 audio inputs. Max 32 in a system sharing the same RS485.	V	Max. 16 on an unit using 16 audio inputs. Max 32 in a system sharing the same RS485.
PPM-IT5	X		V	Max. 1 pcs over TCP/IP using 1 input	V	Max. 1 pcs over TCP/IP using 1 input
NSM	V	Applicable on any input. Max number limted to DSP system occupation.	V	Applicable on any input. Max number limted to DSP system occupation.	V	Applicable on any input. Max number limted to DSP system occupation.
RAC 5	V	Max 16 per device	V	Max 16 per device	V	Max 8 per device
RAC 8	V	Max 16 per device	V	Max 16 per device	V	Max 8 per device
URC-150 URC-150AS	V	Max 8 per device	V	Max 8 per device	V	Max 8 per device
URC-200	I	TCP/IP - max 256 in a system	I	TCP/IP - max 256 in a system	I	TCP/IP - max 256 in a system

I: INFO; ask for availability

PPM-IT5 / PPM-SPWJB / PM1

Paging Consoles

PPM-IT5

Programmable IP Paging Console with Colour Touch Screen & Gooseneck Microphone

The PPM-IT5 console comes with a 5" TFT touch screen interface which allows for intercom with the entire TERRACOM range, as well as call-paging, messages broadcasting and DSP matrix parameter control. Its back-lit touch screen is designed for simple and user-friendly operation. Thanks to powerful echo cancellation, the PPM-IT5 delivers clear sound for full duplex communication. The 3 hardware keys can be freely assigned within the system control software. The PPM-IT5 is a versatile device that fits well in a commercial shopping centre where paging over IP networking brings flexibility and easy access.

Programmable Functions

All the paging parameters needed for site operation can be programmed within the PPM-IT5, such as assigning zones to the various buttons, naming of zones, groups of zones, messages triggering or event control. There are a total of 168 keys over 14 pages for zone or group of zones selections. The pre-recorded messages and chime can be stored within the PPM-IT5 console. A built-in web browser interface allows simplified control and configuration of the PPM-IT5. The device can also be used to control other 3rd party devices over IP.

PPM-SPWJB

PPM JB
Junction Box

PPM-SPWJB is an unidirectional addressable condenser paging microphone (incl. junction box) for UAP and LAPG2T system. In accordance with BS5839, it is monitored by using RS485 protocol over STP CAT5/6 cable, and transmits both audio and power from the paging console to the system units.
The PPM-SP has 8 zone buttons with a sleek gooseneck microphone, providing durability and aesthetics in a slim, stable chassis as well as allowing up to 256 zones expansion via the additional keypad. The buttons represent a single zone or a group of zones and be easily dened in the software using a simple matrix selection.
In addition to the zone LEDs, "Hold" and "Busy" LED signals make PPM-SP an extremely user-friendly paging console. Thanks to the cardioids polar pick-up pattern, the unidirectional condenser microphone ensures the high-quality and directive signal pick-up with minimal interference from the surroundings.

All buttons can be programmed with drag & drop features from the GUI software and each button can be programmed for Push To Talk or latching.
The PPM JB junction box supplied with PPM-SP allows multiple peripherals such as PPM-SP and URC-150 to be cascaded with the distance of up to 300m between a peripheral and a junction box. In addition, the PPM JB junction box can be powered from the processor or 24VDC local power supply.

*PPM-SP: Programmable Paging Microphone SP
*PPM-KP: PPM Keypad for PPM-AS/PSM/PPM-SP
*PPM-SPWJB: Programmable Paging Microphone SP (with Junction Box)

PPM-IT5 CHARACTERISTICS

- 5" TFT LCD full colour touch panel
- Zone selection, paging and control
- Ethernet interface including PoE (Power Over Ethernet)
- Half or full duplex intercom with AEC (Acoustic Echo Cancellation) and NR (Noise Reduction)
- High quality gooseneck microphone and built-in loudspeaker (5W)
- Web browser interface for management and monitor
- Support G.711, G.722, G.726, G.727, G.729, MP3 audio codec and AAC+ decoder
- PoE or 24 VDC power supply (if PoE is not available)
- Automatic gain control on microphone input
- SNMP (Simple Network Management Protocol) for device management on IP networks
- 3 user-defined hardware keys on front panel (Power/Fault/EVAC)
- RJ9 for telephone headset and 2 mini-jack plugs for headset
- Dimensions (D x H x W): 9-7/8" x 3-1/5" x 5-1/2" (250 x 80 x 140 mm)
- Microphone flex length: 11" (280 mm)
- Weight: 2.4 lbs (1098g)
- Colour: RAL7016

PPM-SP CHARACTERISTICS

- Dimension (W x H x D)
  Base: 105 x 50 x 190 mm
  Incl. Microphone: 105 x 350 x 190 mm
- Weight: 0.7 kg
- Colour: RAL 7035
- Cable length: 900 m
- PPM-SPWJB includes Junction Box (JB) and CAT5 cable (1.5m)
- Available for 8 zone expansion with PPM-KP keypad

PM1

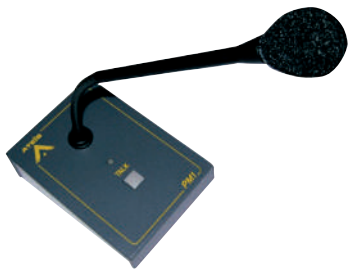

The PM1 is a preamplified single button desktop paging console that links on all the products, UAP G2, LAP G2 and ECS. This deskstop paging console with PTT is meant for a simple All-Call or fixed designated area calls.
It comes with a robust gooseneck microphone and has a symmetric line-level raised output (0 dB).
The unit is 24 VDC powered. Optional PSU available.

Functionality:
- Desktop powered ON: permanent green LED
- Contact Out: activation on call key (PTT)
- Contact In: to light the red LED (line busy indicator)

PM1 CHARACTERISTICS

- Height: 45 mm
- Length: 250 mm with flex 90 mm
- Dimensions: 130 x 90 mm
- Height: 45 mm
- Colour: Ral 7035
- LED Indication
  - Power on (green LED)
  - Busy (red LED)
- Entry contact: toggle the LED in red

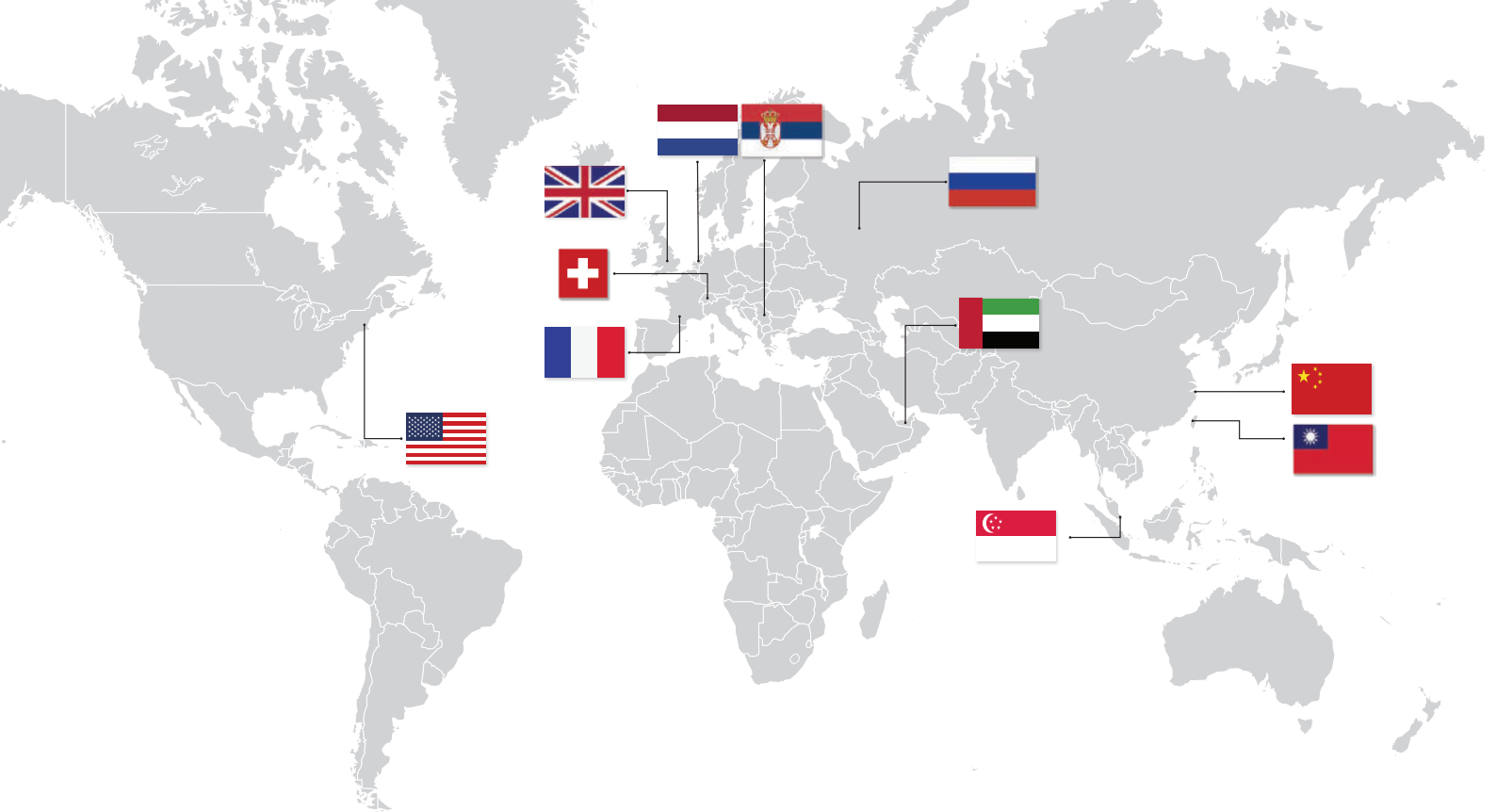

ATEÏS Europe B.V.
Europe & Africa
Celsiusstraat 1 - 2652 XN Lansingerland
(Rotterdam Region), Netherlands
Tel: +31 (0)10 2088690
info@ateis-europe.com

ATEÏS France
8, rue de l'Europe - ZA de Font Ratel,
38640 Claix, France
Tel: +33 (0)4 76992630
contact@ateis.com

Penton UK Ltd.
UK & Ireland
Unit 2, Teville Industrials, Dominion Way, Worthing
West Sussex, BN14 8NW, United Kingdom
Tel: +44 (0)1903 215315
Fax: +44 (0)1903 215415
sales@pentonuk.co.uk

ATEÏS Far-East
Far-East Asia
2F No.60, Xinghua 2nd Rd. Tanzi,
Taichung, Taiwan
Tel: +886 4 25333840
Fax: +886 4 25333830
sales@ateis-fareast.com

ATEÏS Middle East FZCO.
Middle East & India
LIU No. 11 , Dubai Silicon Oasis,
293640 Dubai, United Arab Emirates
Tel: +971 (4) 3262730
Fax: +971 (4) 3262731
info@ateis.ae

ATEÏS SE Europe
Sime Lukina Lazića 12-B,
11040 Belgrade, Serbia
Tel: +381 (0)11 40 89 617
info@ateisseeurope.com

Penton Audio USA
USA, Canada & Latin America
21 Sabin Street Pawtucket, RI 02860, USA
Tel: +1 401-727-1600
Fax: +1 401-727-0003
info@penton-usa.com

ATEÏS China
Room 6-2, Yunheng Building, No.1, Lane 1066,
Sanwu Road, Luotuo Street, Zhenhai District,
Ningbo, China
Tel: 0574-86559991
sales@ateis.com.cn

Xavtel Communications RUS Ltd.
Russian Federation, 115280, Moscow
Leninskaya Sloboda str., 26 bld. 28,
Business Center " Slobodskoy", oce#122
Tel/Fax: +7 495 803 3655
info@xavtel.ru.com

ATEÏS Suisse SA
Avenue des Baumettes 9, 1020 Renens VD,
Switzerland
Tel: +41 (0)218812510
info@ateis.ch

ATEÏS SE PTE. LTD.
South-East Asia
Blk 5002 Ang Mo Kio Ave 5, #03-01B TECHplace
II. Singapore 569871
Tel: +65 6481 1968
Fax: +65 6481 1960
info@ateis-se.com.sg

ATEÏS®

A member of
PAX ProAV Group